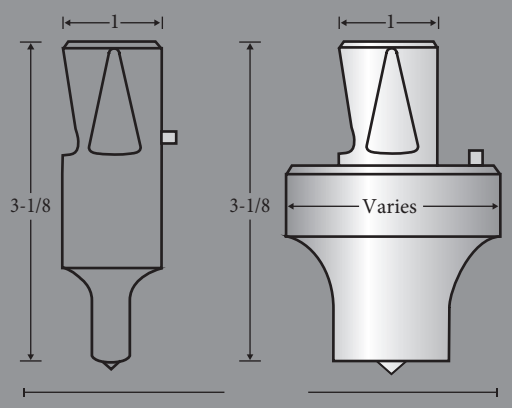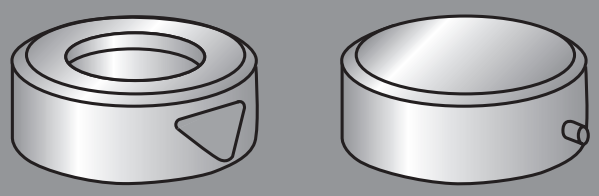
1
3-1/8
1
3-1/8
Varies